Power board

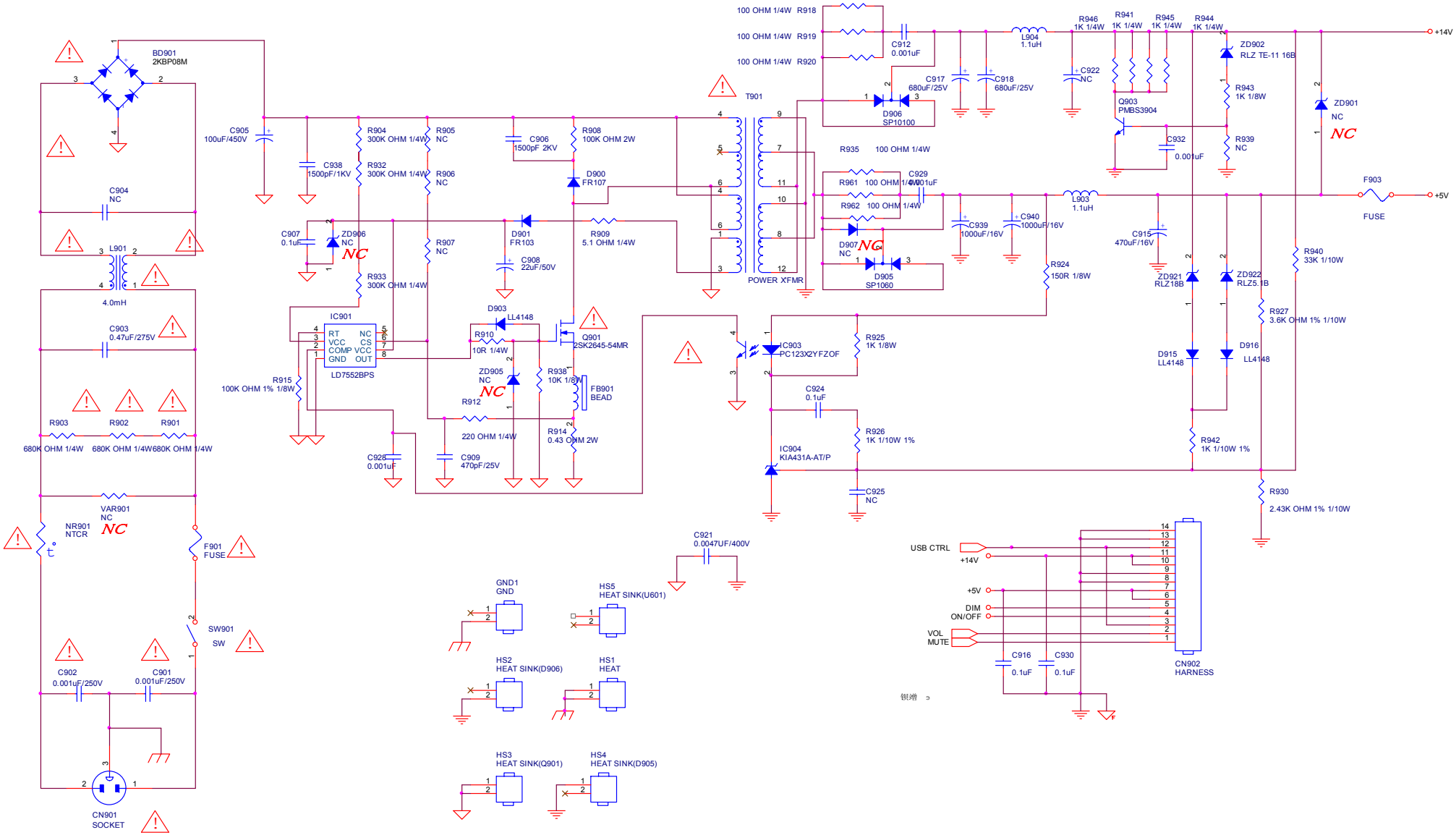
BD901
2KBP08M
C905
100uF/450V
C904
NC
L901
4.0mH
C903
0.47uF/275V
R903
R902
R901
680K OHM 1/4W
680K OHM 1/4W
680K OHM 1/4W
VAR901
NC
NR901
NTCR
NC
F901
FUSE
SW901
SW
C902
0.001uF/250V
C901
0.001uF/250V
CN901
SOCKET
C938
1500pF/1KV
R904
300K OHM 1/4W
R932
300K OHM 1/4W
R905
NC
R906
NC
C906
1500pF 2KV
R908
100K OHM 2W
D900
FR107
C907
0.1uF
ZD906
NC
NC
R907
NC
D901
FR103
R909
5.1 OHM 1/4W
R933
300K OHM 1/4W
C908
22uF/50V
IC901
RT
VCC
COMP
GND
NC
CS
VCC
OUT
LD7552BPS
D903
LL4148
R910
10R 1/4W
Q901
2SK2645-54MR
R915
100K OHM 1% 1/8W
ZD905
NC
NC
R938
10K 1/8W
FB901
BEAD
R912
220 OHM 1/4W
R914
0.43 OHM 2W
C928
0.001uF
C909
470pF/25V
100 OHM 1/4W R918
100 OHM 1/4W R919
100 OHM 1/4W R920
T901
POWER XFMR
C912
0.001uF
C917
680uF/25V
D906
SP10100
C918
680uF/25V
L904
1.1uH
R946
1K 1/4W
R941
1K 1/4W
R945
1K 1/4W
R944
1K 1/4W
C922
NC
Q903
PMBS3904
C932
0.001uF
ZD902
RLZ TE-11 16B
R943
1K 1/8W
R939
NC
ZD901
NC
NC
+14V
F903
FUSE
+5V
R935
100 OHM 1/4W
R961
100 OHM 1/4W
C929
0.001uF
R962
100 OHM 1/4W
D907
NC
NG
D905
SP1060
C939
1000uF/16V
C940
1000uF/16V
L903
1.1uH
C915
470uF/16V
R924
150R 1/8W
ZD921
RLZ18B
ZD922
RLZ5.1B
R940
33K 1/10W
R927
3.6K OHM 1% 1/10W
D915
LL4148
D916
LL4148
IC903
PC123X2YFZOF
R925
1K 1/8W
C924
0.1uF
R926
1K 1/10W 1%
IC904
KIA431A-AT/P
C925
NC
R942
1K 1/10W 1%
R930
2.43K OHM 1% 1/10W
C921
0.0047UF/400V
GND1
GND
HS5
HEAT SINK(U601)
HS2
HEAT SINK(D906)
HS1
HEAT
HS3
HEAT SINK(Q901)
HS4
HEAT SINK(D905)
USB CTRL
+14V
+5V
DIM
ON/OFF
VOL
MUTE
C916
0.1uF
C930
0.1uF
CN902
HARNESS

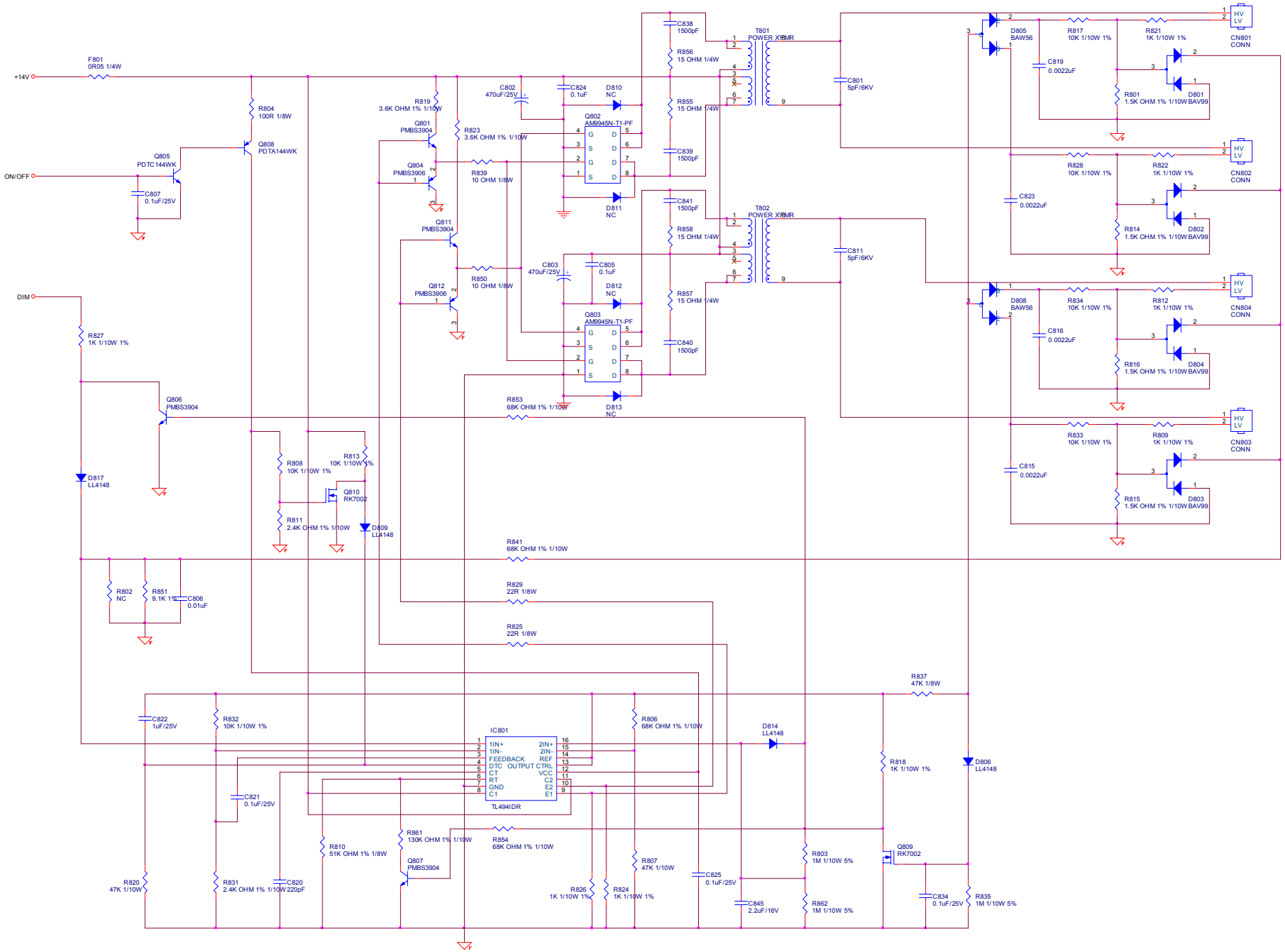
+14V
F801
0R05 1/4W
ON/OFF
DIM
R804
100R 1/8W
Q808
PDTA144WK
Q805
PDTC144WK
C807
0.1uF/25V
R827
1K 1/10W 1%
Q806
PMBS3904
D817
LL4148
R819
3.6K OHM 1% 1/10W
Q801
PMBS3904
Q804
PMBS3906
R823
3.6K OHM 1% 1/10W
R839
10 OHM 1/8W
Q811
PMBS3904
R850
10 OHM 1/8W
Q812
PMBS3906
C802
470uF/25V
C824
0.1uF
D810
NC
Q802
AM9945N-T1-PF
D811
NC
C803
470uF/25V
C805
0.1uF
D812
NC
Q803
AM9945N-T1-PF
D813
NC
C838
1500pF
R856
15 OHM 1/4W
R855
15 OHM 1/4W
C839
1500pF
C841
1500pF
R858
15 OHM 1/4W
R857
15 OHM 1/4W
C840
1500pF
T801
POWER XFMR
T802
POWER XFMR
C801
5pF/6KV
C811
5pF/6KV
D805
BAW56
D808
BAW56
C819
0.0022uF
C823
0.0022uF
C816
0.0022uF
C815
0.0022uF
R817
10K 1/10W 1%
R821
1K 1/10W 1%
R801
1.5K OHM 1% 1/10W
D801
BAV99
R828
10K 1/10W 1%
R822
1K 1/10W 1%
R814
1.5K OHM 1% 1/10W
D802
BAV99
R834
10K 1/10W 1%
R812
1K 1/10W 1%
R816
1.5K OHM 1% 1/10W
D804
BAV99
R833
10K 1/10W 1%
R809
1K 1/10W 1%
R815
1.5K OHM 1% 1/10W
D803
BAV99
HV
LV
CN801
CONN
CN802
CONN
CN804
CONN
CN803
CONN
R853
68K OHM 1% 1/10W
R808
10K 1/10W 1%
R813
10K 1/10W 1%
Q810
RK7002
R811
2.4K OHM 1% 1/10W
D809
LL4148
R841
68K OHM 1% 1/10W
R802
NC
R851
9.1K 1%
C806
0.01uF
R829
22R 1/8W
R825
22R 1/8W
R837
47K 1/8W
C822
1uF/25V
R832
10K 1/10W 1%
IC801
1IN+
1IN-
FEEDBACK
DTC
CT
RT
GND
C1
2IN+
2IN-
REF
OUTPUT CTRL
VCC
C2
E2
E1
TL494IDR
R806
68K OHM 1% 1/10W
D814
LL4148
R818
1K 1/10W 1%
D806
LL4148
C821
0.1uF/25V
R861
130K OHM 1% 1/10W
R854
68K OHM 1% 1/10W
R810
51K OHM 1% 1/8W
Q807
PMBS3904
R807
47K 1/10W
R803
1M 1/10W 5%
Q809
RK7002
R820
47K 1/10W
R831
2.4K OHM 1% 1/10W
C820
220pF
R826
1K 1/10W 1%
R824
1K 1/10W 1%
C825
0.1uF/25V
C845
2.2uF/16V
R862
1M 1/10W 5%
C834
0.1uF/25V
R835
1M 1/10W 5%